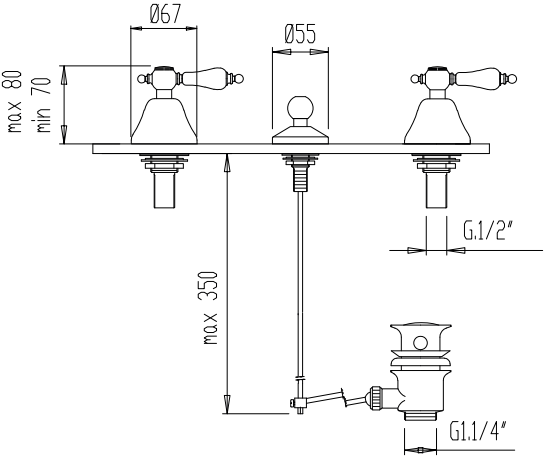
Ø67
Ø55
max 80
min 70
G.1/2"
max 350
G1.1/4"