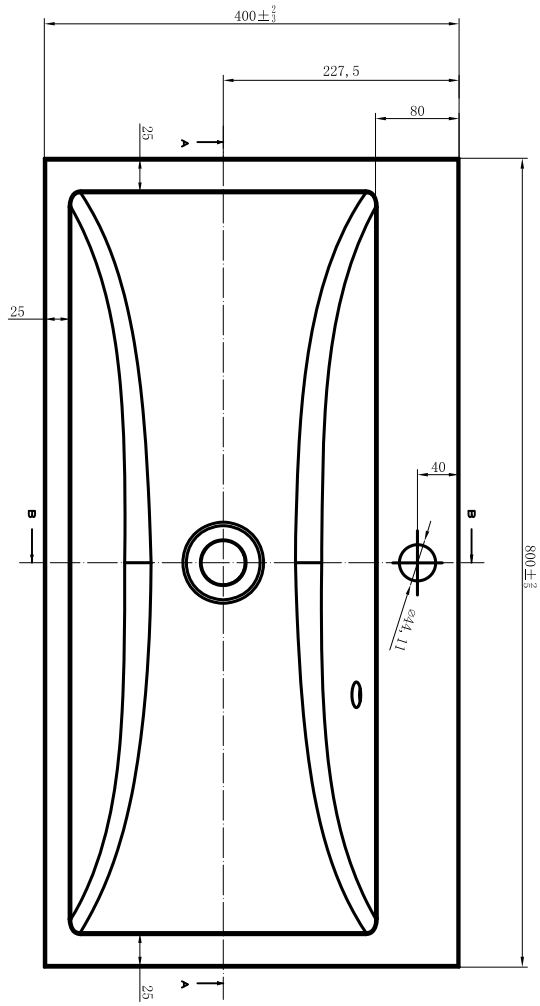
400±2/3
227,5
80
25
A
25
40
B
B
800±2/3
ø44.11
25
A

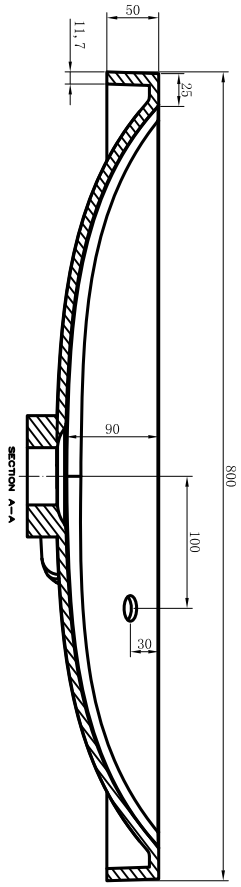
50
11.7
25
90
SECTION A—A
800
100
30

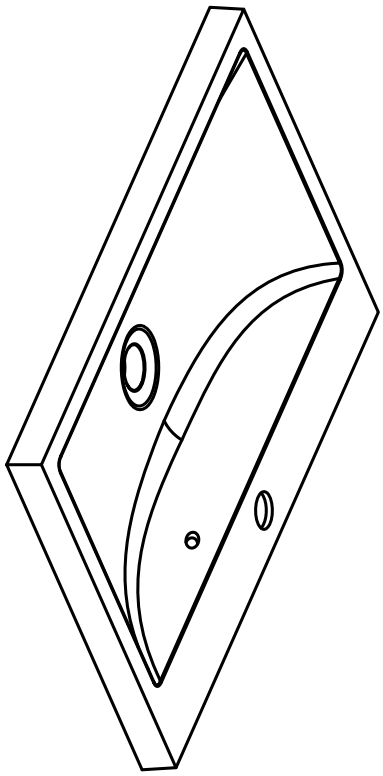

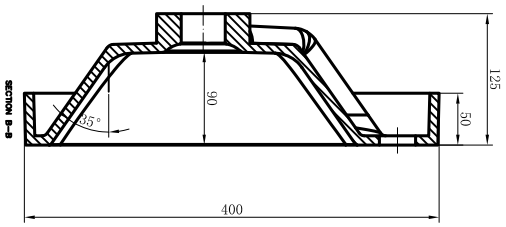
SECTION B—B
35°
90
125
50
400